Ritter®
by Midmark

Double 84” Door Lock Kit Installation (002-0948-63)

R.H. Door Assembly

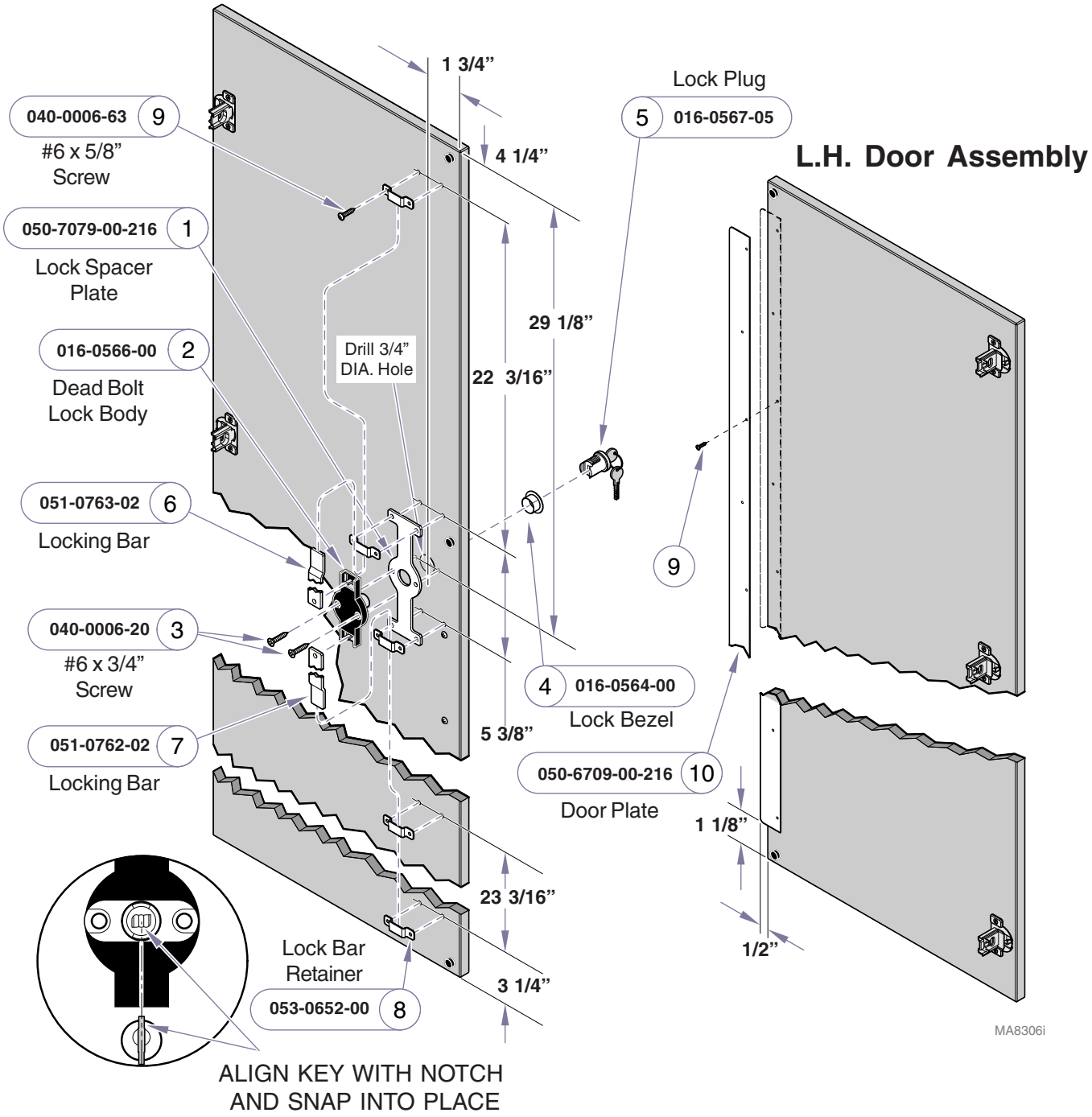

© 2011 Midmark Corporation | 60 Vista Drive Versailles, OH 45830 USA | 1-800-643-6275 | 1-937-526-3662 | midmark.com