midmark®

Anesthesia Machine Installation

Applies to Models:
VME™ Tabletop
VME2®

WARNING
Wall mounted anesthesia machines should only be installed in wood stud or concrete walls. Do not install anesthesia machine in a vehicle or similarly confined space. Waste gases from the machine could cause impairment to the occupants.

Note
Wall mounted units require mounting kit 91800103.

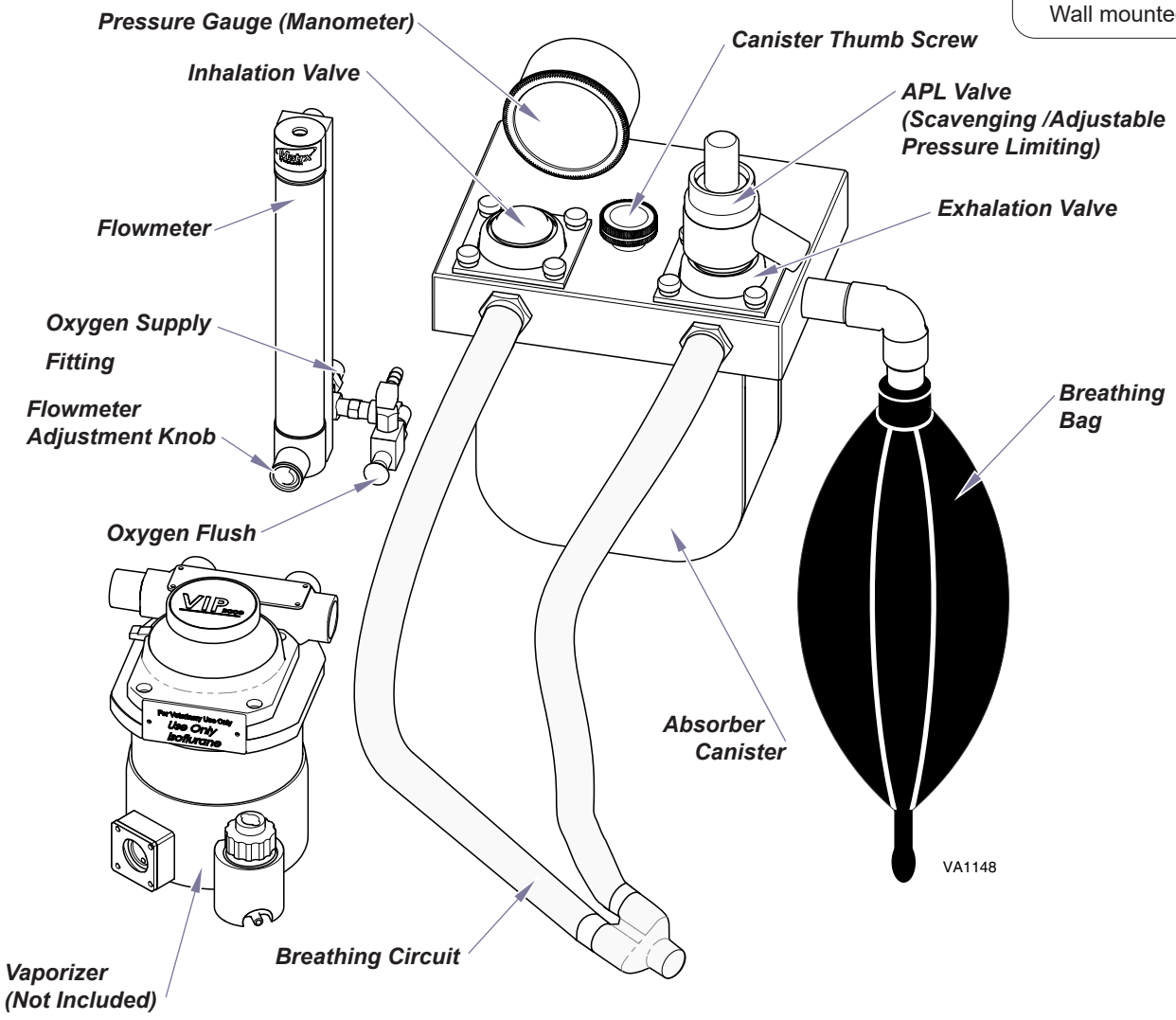

VME2 Model

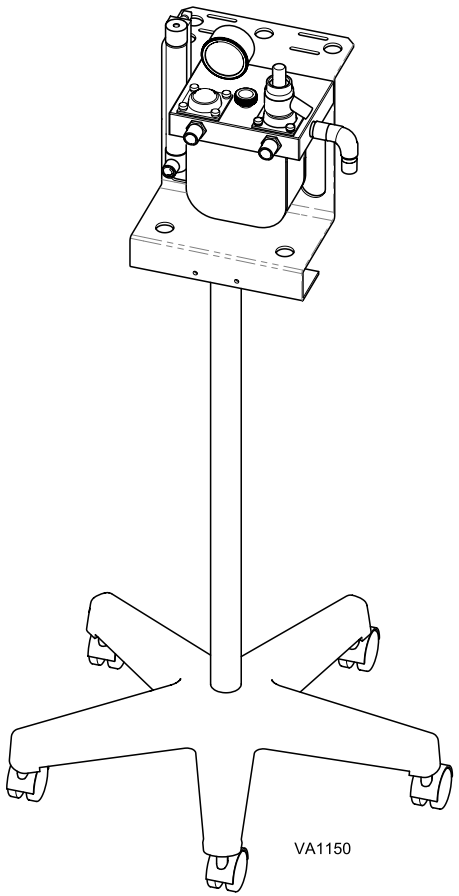

Mechanical Components Shown are Typical on All VME Tabletop and VME2 Anesthesia Machines.

© 2011 Midmark Corp. | 60 Vista Drive Versailles, OH 45380 USA | 1.800.643.6275 | 1.937.526.3662 |

Style G **10578600** **Rev. CA5 10/27/22**

Important Information

Intended Use

The operation of anesthesia machines is restricted to use by veterinary professionals trained in anesthesia practice.

Caution
Federal law restricts this device to sale by or on the order of a licensed veterinarian.

Disposal of Equipment

At the end of product life, the unit(s), accessories, and other consumable goods may become contaminated from normal use. Consult local codes and ordinances for proper disposal of equipment, and other consumable goods.

Transportation / Storage Conditions

Ambient Temperature Range:.....32°F to 104°F (0°C to 40°C)
Relative Humidity.....10% to 90% (non condensing)
Atmospheric Pressure .....500hPa to 1060hPa (0.49atm to 1.05atm)

Symbols

These symbols may appear on your equipment and/or in the manuals.

Proper Shipping Orientation

Maximum stacking height
(Do not stack)

Fragile

Keep Dry

Consult User Guide

Do Not Tumble

Handle With Care

Safety Symbols

WARNING
Indicates a potentially hazardous situation which could result in serious injury if not avoided.

Caution
Indicates a potentially hazardous situation which may result in minor or moderate injury if not avoided. It may also be used to alert against unsafe practices

Equipment Alert
Indicates a potentially hazardous situation which could result in equipment damage if not avoided.

Caution
This product contains natural rubber latex which may cause allergic reactions.

Note
Amplifies a procedure, practice, or condition.

© 2011 Midmark Corp. | 60 Vista Drive Versailles, OH 45380 USA | 1.800.643.6275 | 1.937.526.3662 |

VME™ Tabletop/Wall Mounted

Step 1: Install vaporizer.

Note: Vaporizer is not included with anesthesia machine, however the mounting hardware for a vaporizer is included.

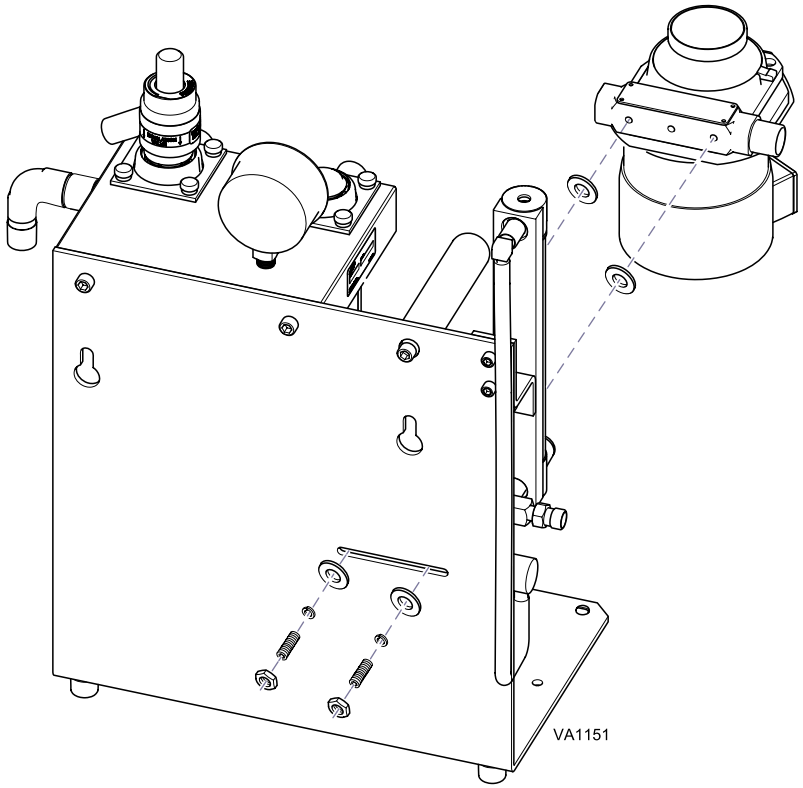

Step 2: Remove canister.
Fill with absorbent according to specifications on canister label.
Reinstall canister.

Note: Do not overtighten canister knob assembly.

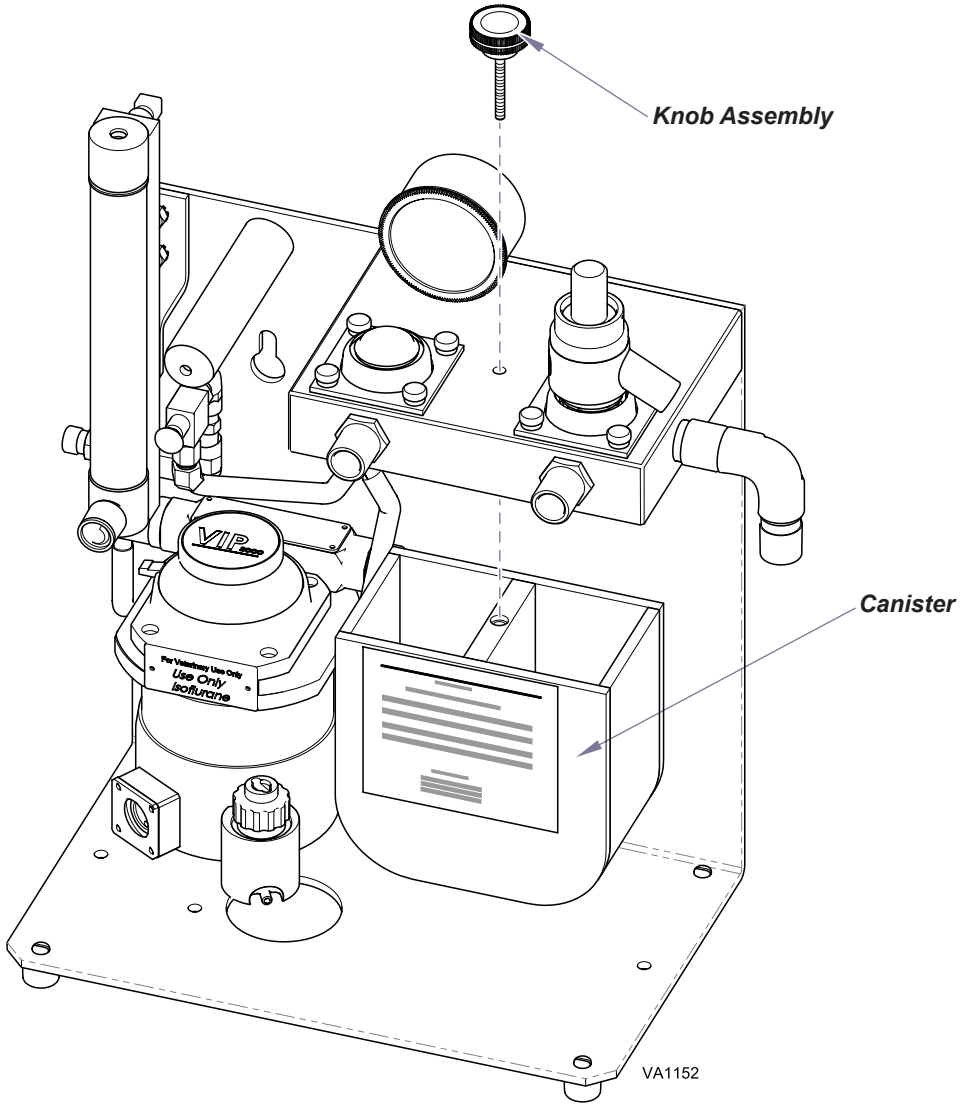

© 2011 Midmark Corp. | 60 Vista Drive Versailles, OH 45380 USA | 1.800.643.6275 | 1.937.526.3662 |

VME™ Tabletop/Wall Mounted Continued

Step 3: Install breathing bag and breathing circuit. Verify hoses are assembled as shown.

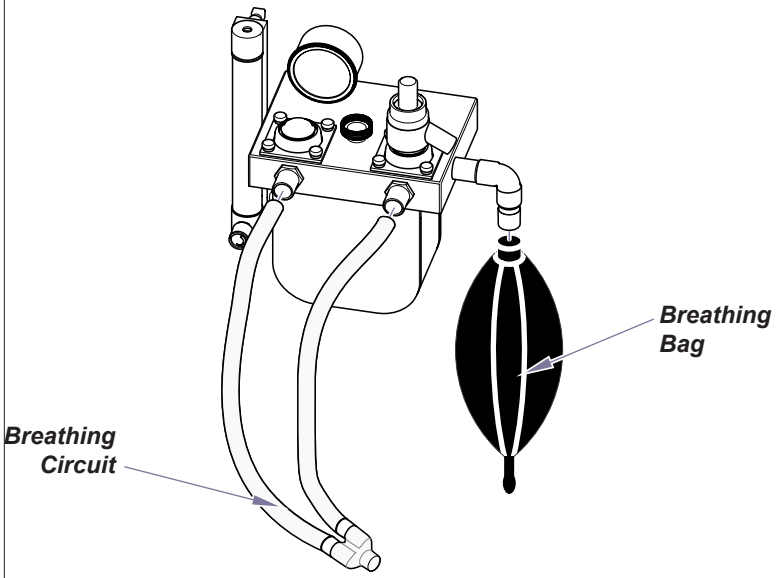

Reference Hose Diagram

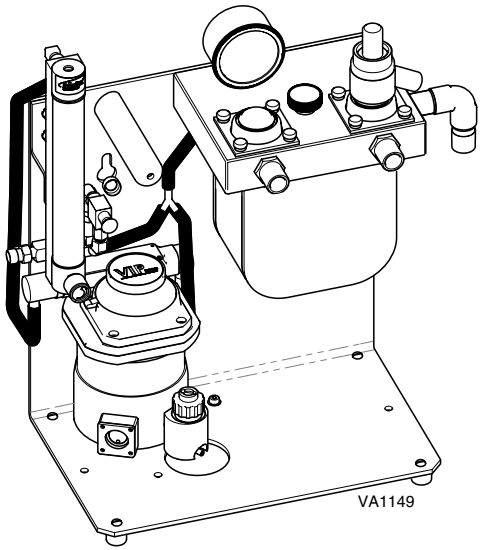

Step 4: **Place anesthesia machine on table or mount on wall. Perform leak test. *(Leak Test Procedure in back of this manual.)***

Note: Wall installation requires mounting kit, 91800103. Instructions for wall mount are included with kit.

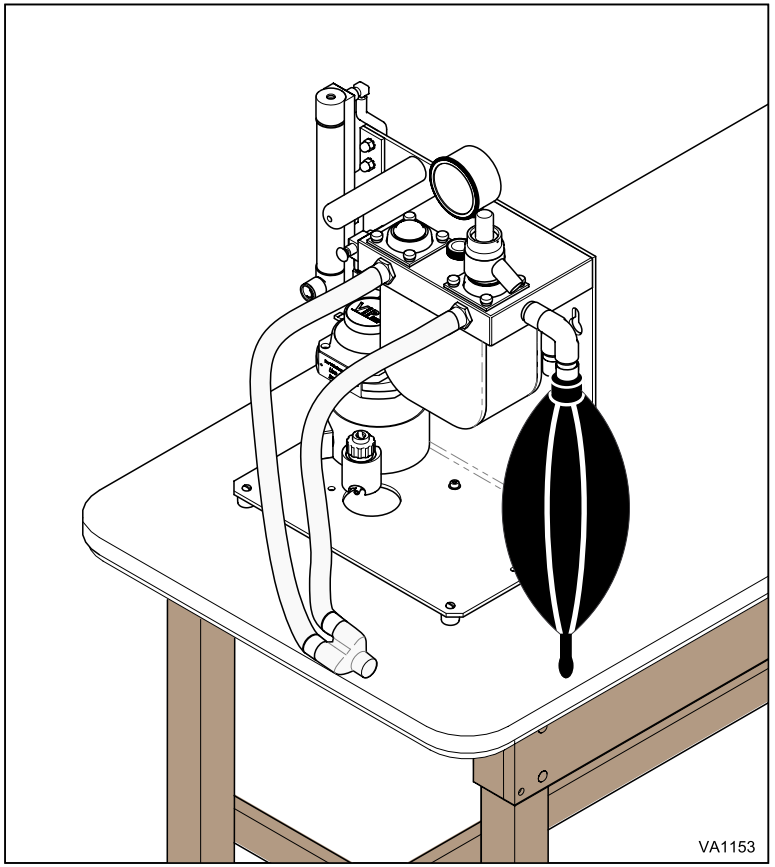

VME™ Tabletop installation is Complete After Leak Test is Performed.

© 2011 Midmark Corp. | 60 Vista Drive Versailles, OH 45380 USA | 1.800.643.6275 | 1.937.526.3662 |

VME2® Stand Mounted

Step 1: Place base with casters on floor.

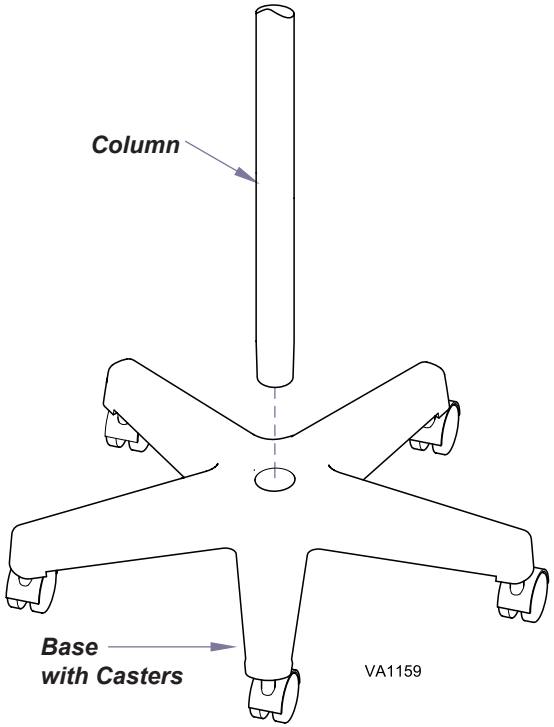

Step 2: Install tapered end of column into base.

Step 3: Install absorber assembly into mounting column.

Note: Evenly tighten two 5/16" hex nuts using 1/2" nut driver (supplied) to secure VME2 assembly to column.

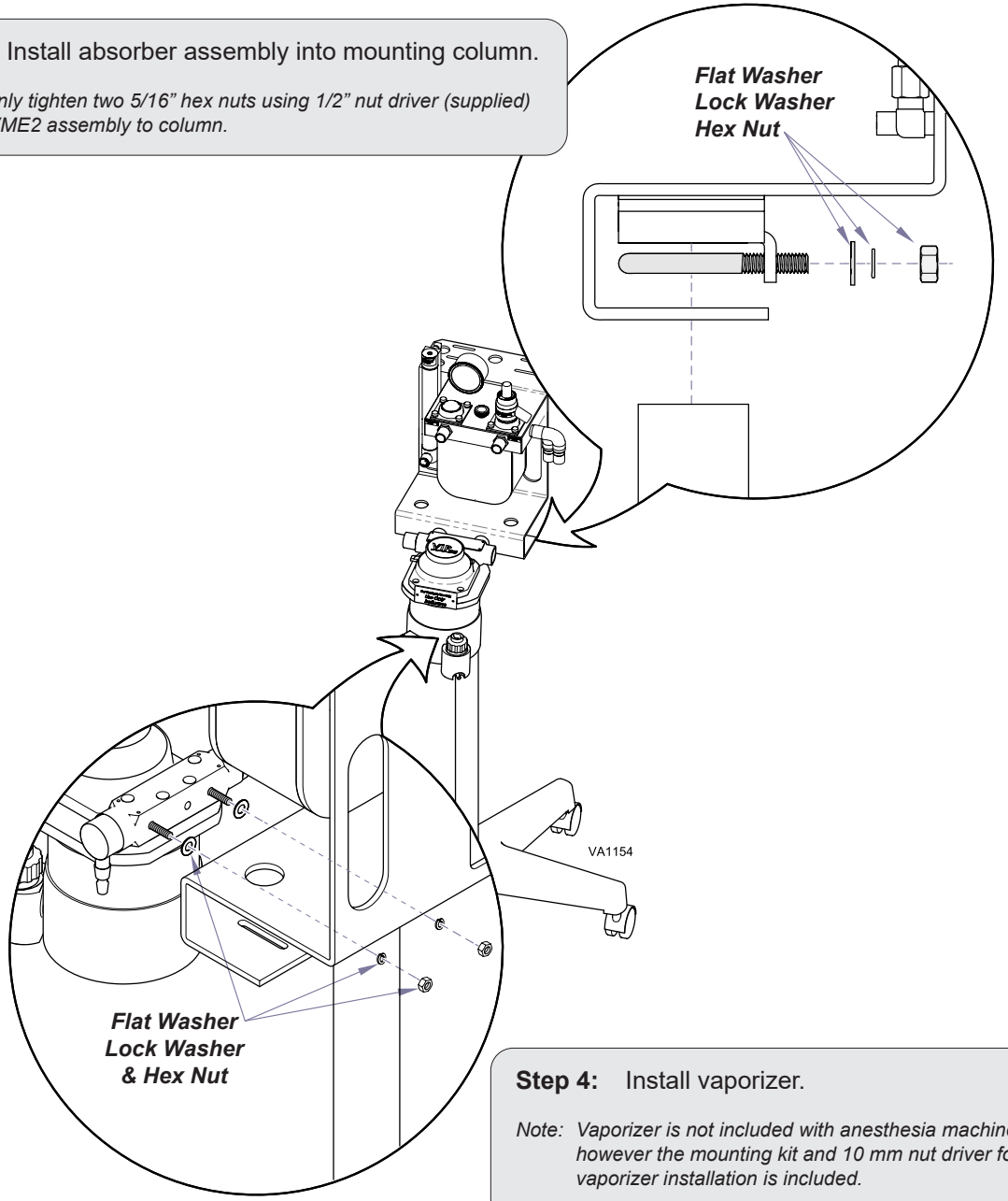

Step 4: Install vaporizer.

Note: Vaporizer is not included with anesthesia machine, however the mounting kit and 10 mm nut driver for vaporizer installation is included.

© 2011 Midmark Corp. | 60 Vista Drive Versailles, OH 45380 USA | 1.800.643.6275 | 1.937.526.3662 |

VME2® Stand Mounted Continued

Step 5: Remove canister.
Fill with absorbent according to specifications on canister label.
Reinstall canister.

Note: Do not overtighten canister knob assembly.

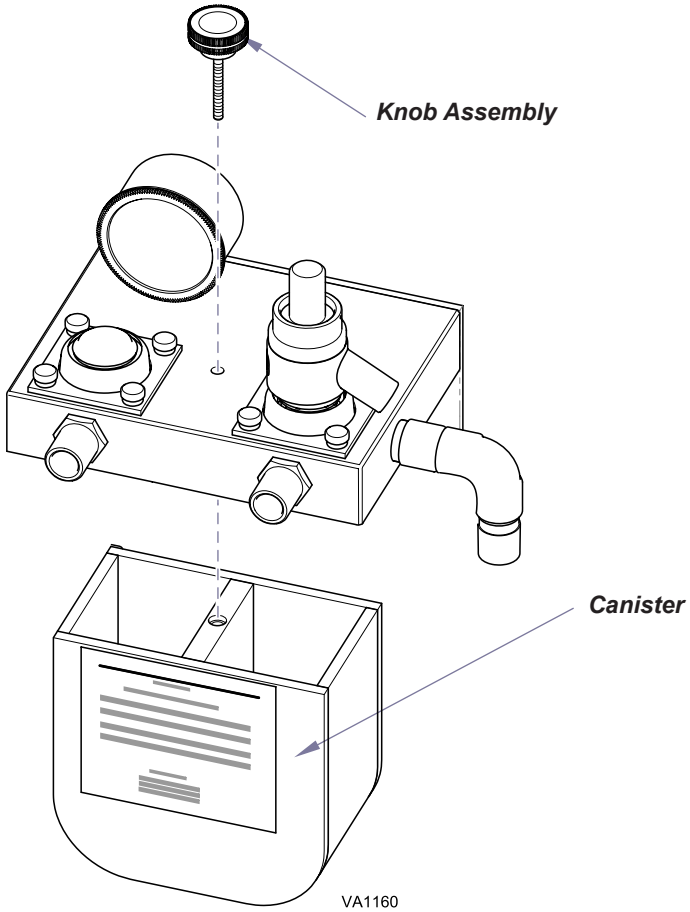

Step 6: Install breathing bag and breathing circuit.
Verify hoses are assembled as shown.
Perform leak test. *(Leak Test Procedure in back of this manual.)*

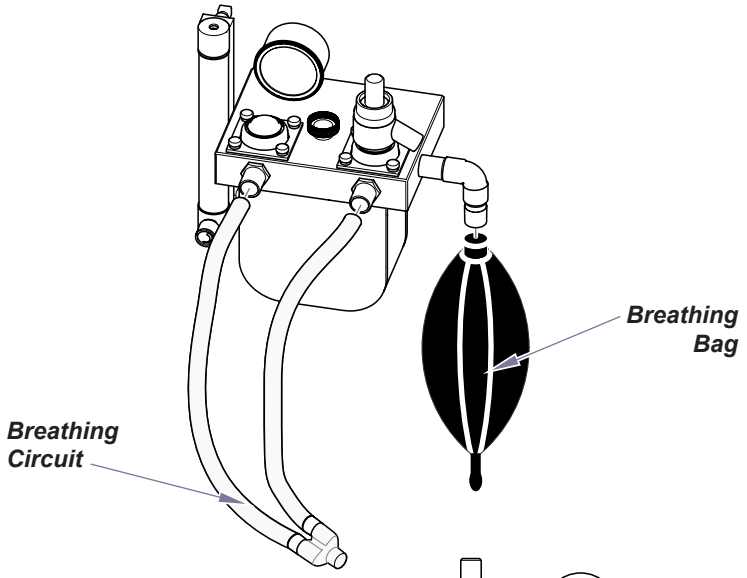

Reference Hose Diagram

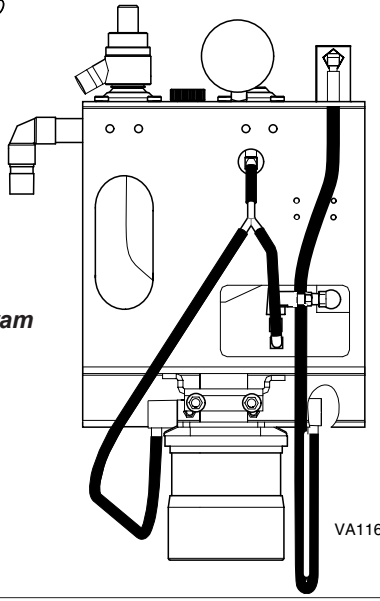

© 2011 Midmark Corp. | 60 Vista Drive Versailles, OH 45380 USA | 1.800.643.6275 | 1.937.526.3662 |

Leak Test (All Models)

Equipment Alert

Do not activate the oxygen flush during any part of this leak test.

To perform leak test...

A) Connect oxygen tank.
B) Close APL (Scavenging /Adjustable Pressure Limiting) valve by turning knob clockwise.
C) Place thumb over patient connection of breathing circuit Y.
D) Remove breathing bag and cover bag port opening. (Use palm of hand that is covering Y.)
E) With oxygen (50-55 PSI [3.4-3.8 Bar]) supplied to anesthesia machine, slowly open flowmeter to register 30cm H_20 on anesthesia machine pressure gauge.
F) Turn off flowmeter when pressure reaches 30cm H_2O. (If pressure holds steady the system is leak free but if pressure drops, proceed to step (G).)
G) Slowly open flowmeter until pressure stabilizes at 30cm. H_2O setting. (This determines the magnitude of the leak. If leak rate is greater than 300ml/min; proceed to step (G).)
H) Refer to "What if machine leaks?
I) Replace reservoir bag. Repeat step (B) and steps (D) through (F). This will determine the integrity of breathing bag.
J) Open APL Valve at end of Leak Test Procedure by turning knob counter clockwise.

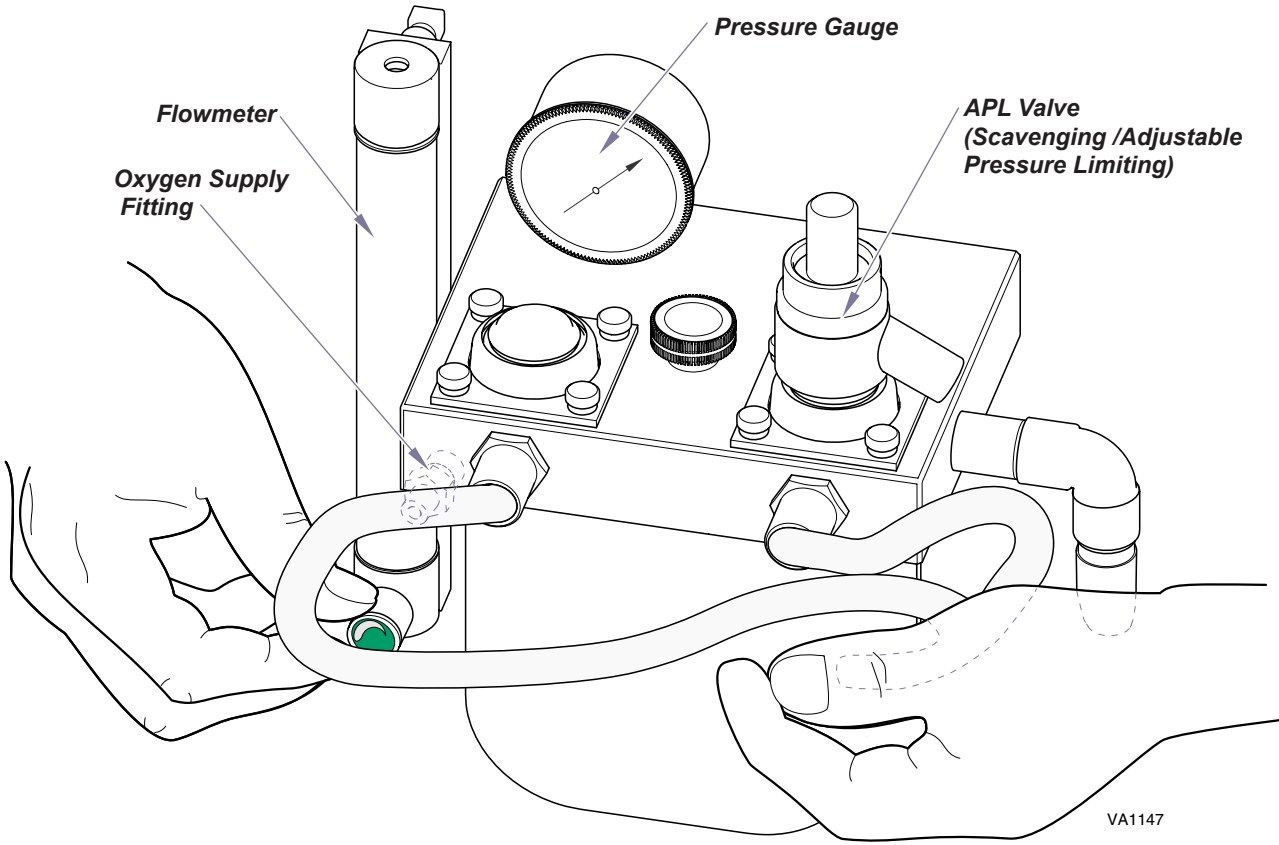

What if Machine Leaks?

1) Breathing Bag - *If leak occurs, replace.*
2) Breathing Circuit - *Install new breathing circuit or obstruct inhalation / exhalation openings to determine if leak originates from breathing circuit.*
3) Vaporizer Fittings - *Verify fittings and tubing are securely attached.*
4) Canister Gasket - *Check for loose absorbent grains between canister housing gasket.*
5) Verify Canister *is seated properly.*
6) APL Valve - *Remove valve and obstruct opening to determine if leak originates from APL valve. Check the o-ring under valve for damage.*
7) O-Rings *under dome and clamp. Check the o-rings for damage.*

© 2011 Midmark Corp. | 60 Vista Drive Versailles, OH 45380 USA | 1.800.643.6275 | 1.937.526.3662 |

Dimensions	VME Stand	VME Wall Mounted	VME Tabletop
Floor to Top of Anesthesia Machine:	51” (129.54 cm)	N/A	N/A
Total Width of Unit:	15” (38.1 cm)	15” (38.1 cm)	15” (38.1 cm)
Width of Shelf:	10 1/2” (26.67 cm)	13 1/2” (34.29 cm)	13 1/2” (34.29 cm)
Length of Shelf:	10” (15.24 cm)	8 1/2” (21.59 cm)	8 1/2” (21.59 cm)
Distance from Wall:	N/A	8 3/4”	N/A
Floor Footprint:	27” (68.58 cm)	N/A	N/A
Wall Footprint:	N/A	19” x 14” (48.26 x 35.56 cm)	19” x 14” (48.26 x 35.56 cm)
Shipping Weight:	44 lbs	27 lbs	24 lbs

Dimensions	VMS® Stand	VMS Wall Mounted	VMS Plus	VMC
Floor to Top of Anesthesia Machine:	54” (137.15 cm)	N/A	57” (127 cm)	53 1/2” (135.89 cm)
Total Width of Unit:	12” (30.48 cm)	12” (30.48 cm)	12” (30.48 cm)	21” (53.34 cm)
Width of Shelf:	N/A	N/A	22” (55.88 cm)	12” (30.48 cm)
Length of Shelf:	N/A	N/A	13 1/4” (33.65 cm)	12” (30.48 cm)
Swing Radius:	N/A	6 3/4“ (17.14 cm)	N/A	N/A
Distance from Wall:	N/A	8 3/4”	N/A	N/A
Floor Footprint:	27” (68.58 cm)	N/A	27” (68.58 cm)	27” (68.58 cm)
Wall Footprint:	N/A	22” x 12”	N/A	N/A
Shipping Weight:	42 lbs	26 lbs	75 lbs	75 lbs