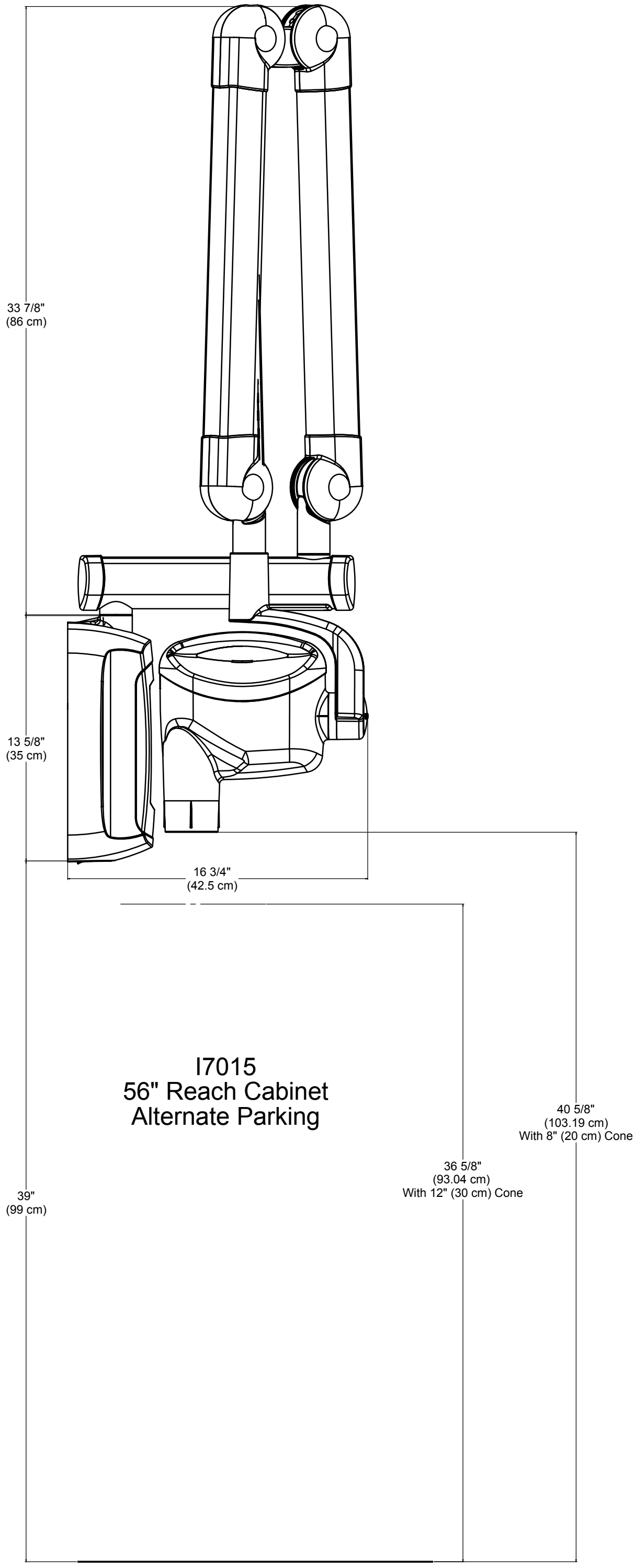
33 7/8"
(86 cm)
13 5/8"
(35 cm)
16 3/4"
(42.5 cm)
I7015
56" Reach Cabinet
Alternate Parking
40 5/8"
(103.19 cm)
With 8" (20 cm) Cone
36 5/8"
(93.04 cm)
With 12" (30 cm) Cone
39"
(99 cm)