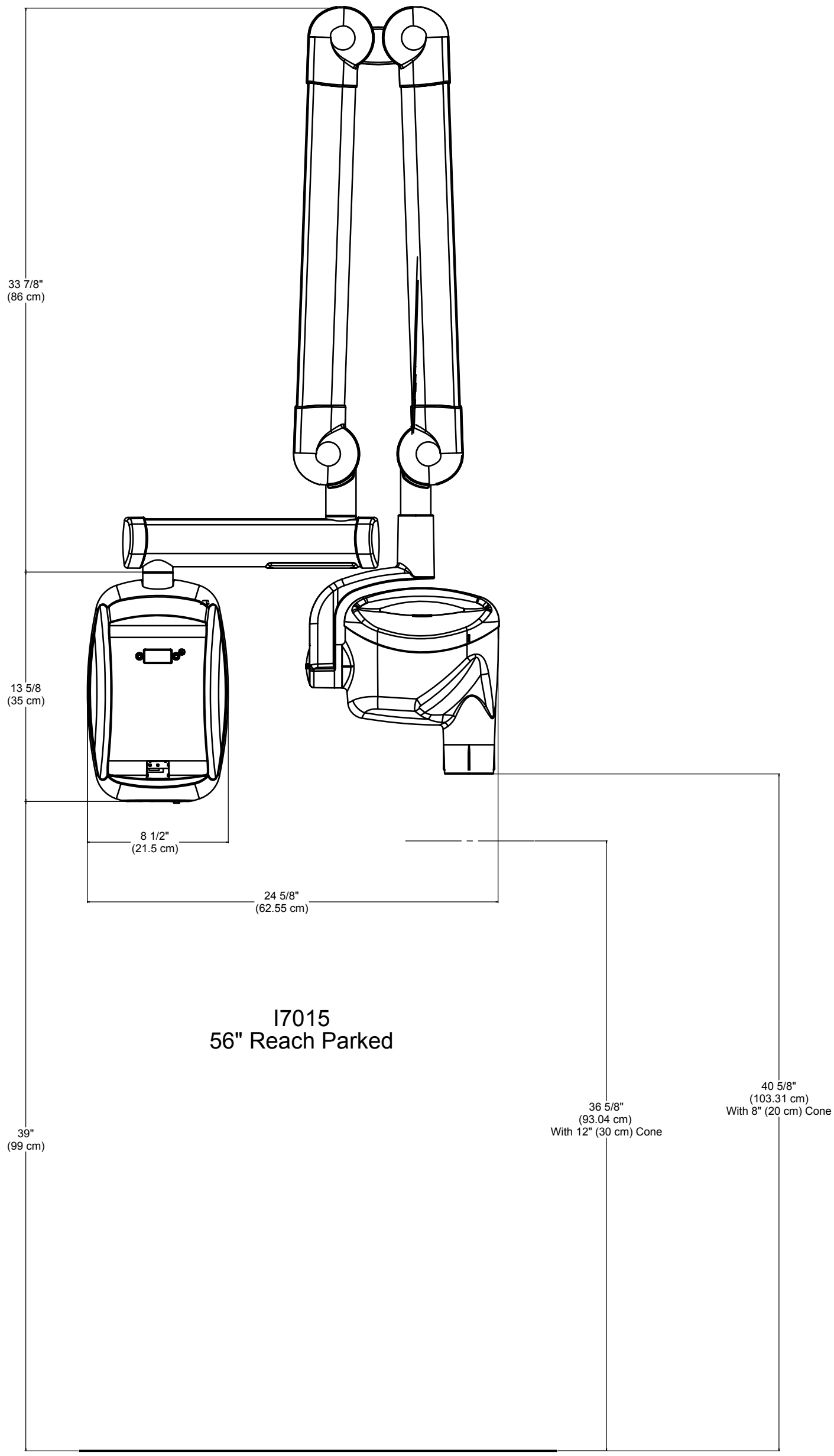


I7015
56" Reach Parked