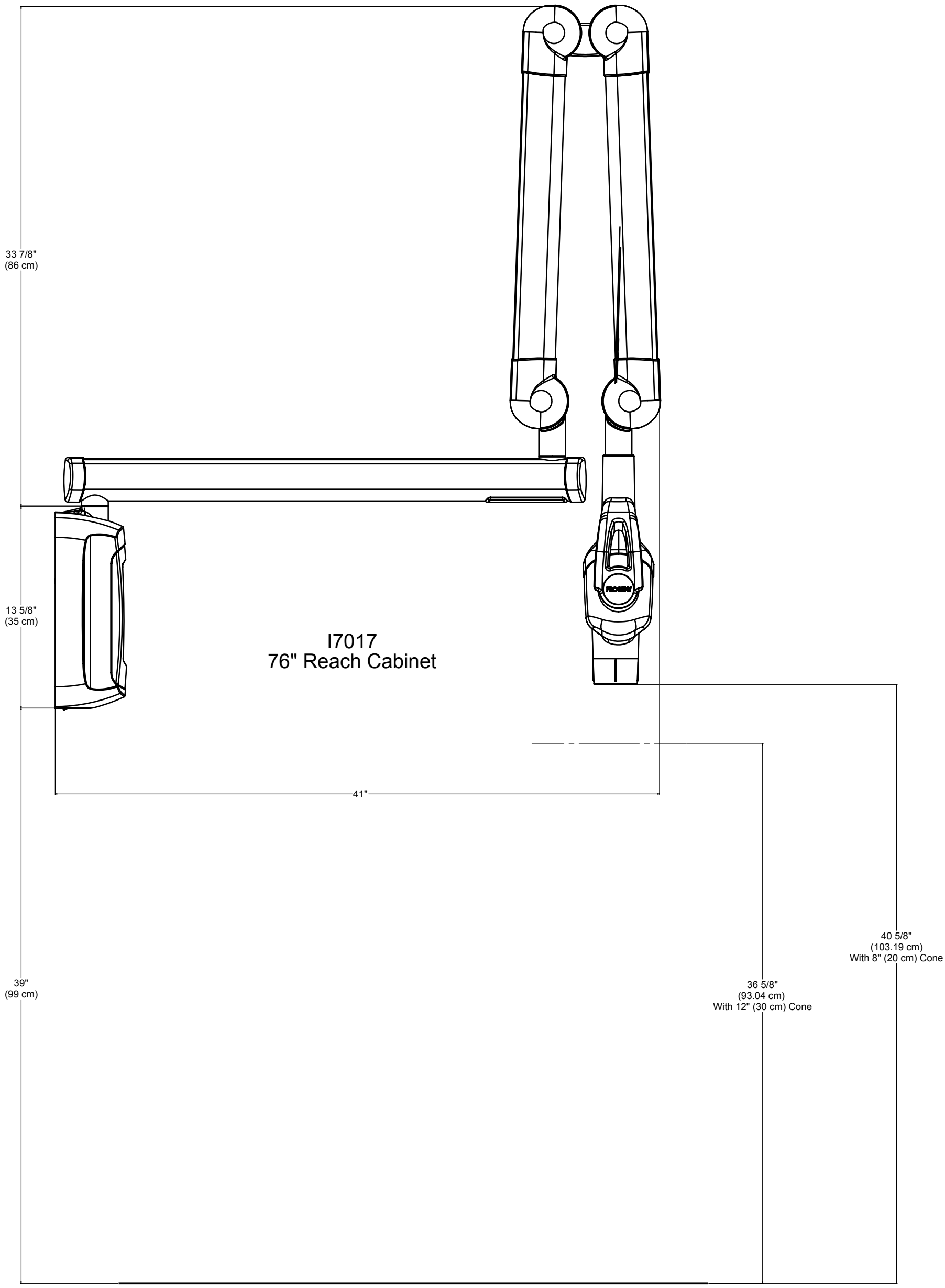
33 7/8"
(86 cm)
13 5/8"
(35 cm)
I7017
76" Reach Cabinet
41"
40 5/8"
(103.19 cm)
With 8" (20 cm) Cone
39"
(99 cm)
36 5/8"
(93.04 cm)
With 12" (30 cm) Cone