Drawer w/o Lock [9A646001]
Drawer w/ Lock [9A647001]

- **Capacity**
  3 lb max weight.

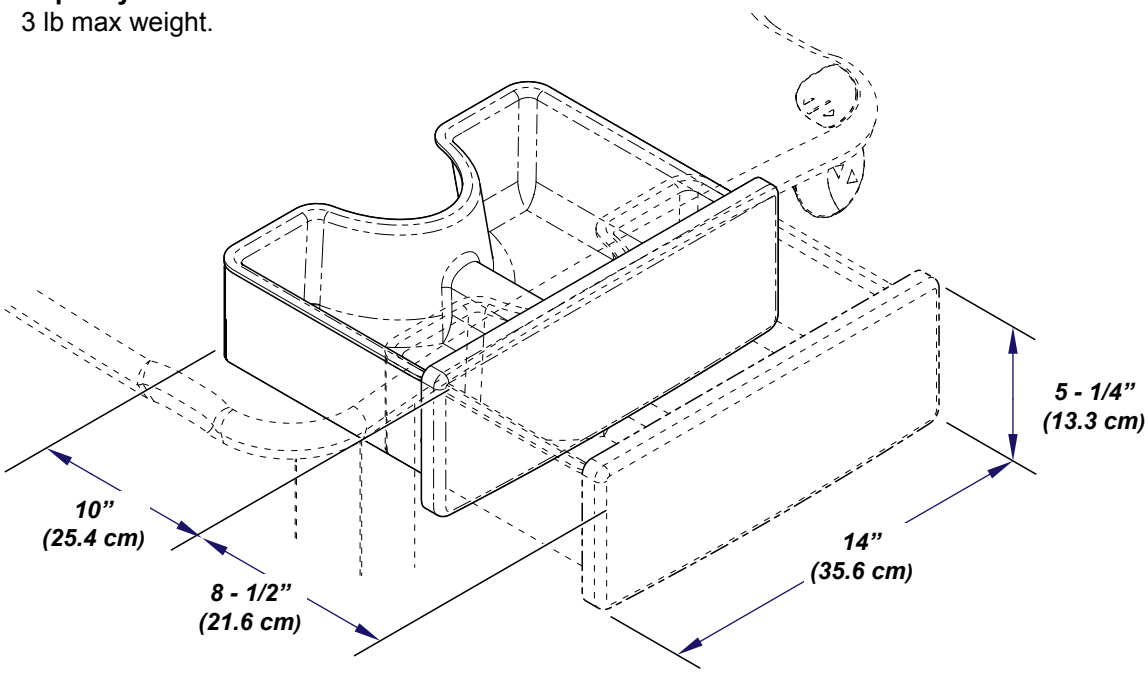

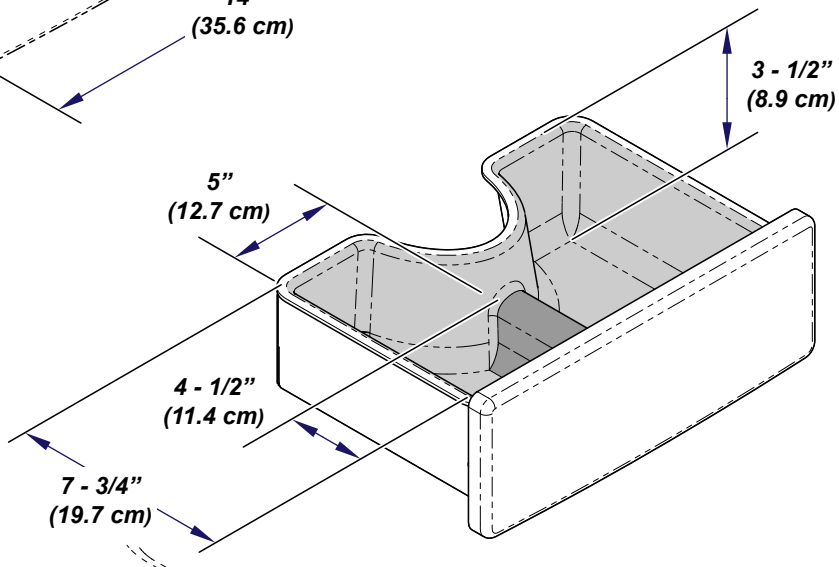

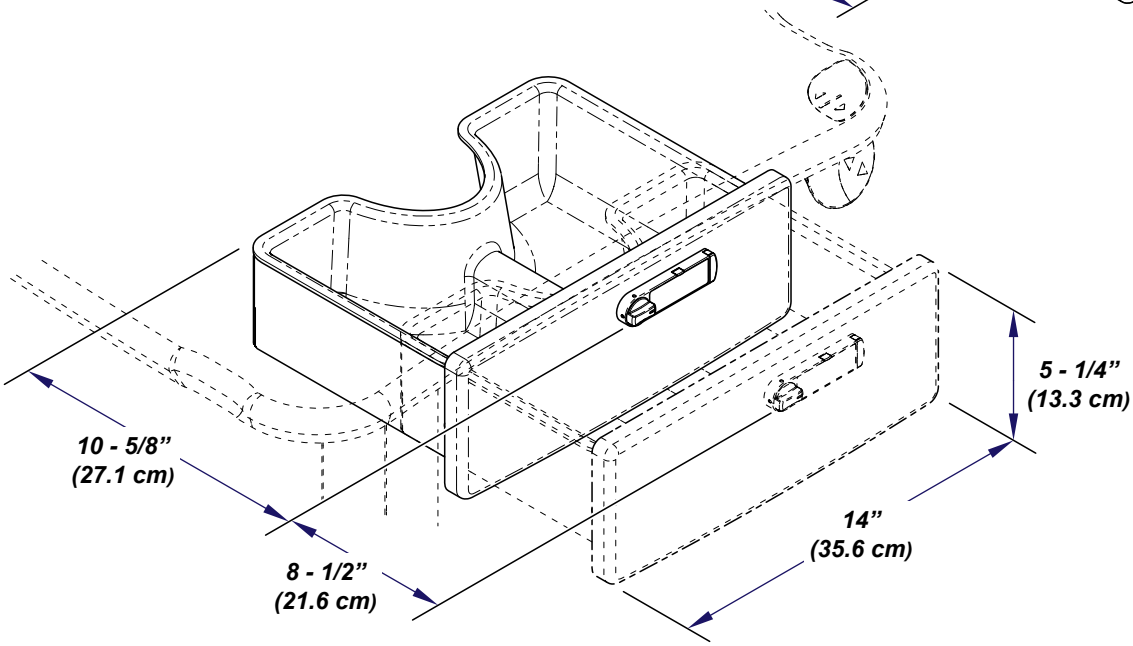

MA11137i